ACRYLIC 3-PANEL
# SHOWER WALL KIT

Heritage Calacatta, Digital Print Pattern

Size: 36” x 60”x 96”

## SPECIFICATIONS



Color and pattern may vary from panel to panel and from the images shown.

# Acrylic 3-Panel Shower Wall Kit

Heritage Calacatta, High Resolution Digital Print Pattern

| WALL THICKNESS | | SHIPPING | |
|---|---|---|---|
| Inches. | mm. | BOX SIZE | SHIP WEIGHT |
| 0.118 | 3 | 24”x24”x61” | 81 LBS. |

The Ella 3-piece acrylic panel wall kit, sized 36″x 60″x 96″, offers an easy installation option, either glued to drywall or over existing tile. It includes a back panel (60” x 96”) and two side panels (36” x 96”), which can be cut to fit your shower space. The edges should be finished with molding (not included) or caulking and painted to match the wall color, with the method of finishing at the contractor's discretion. These 3 flat panels are rolled and shipped in a 24” x 24” x 61” box to any location in the USA or Canada.

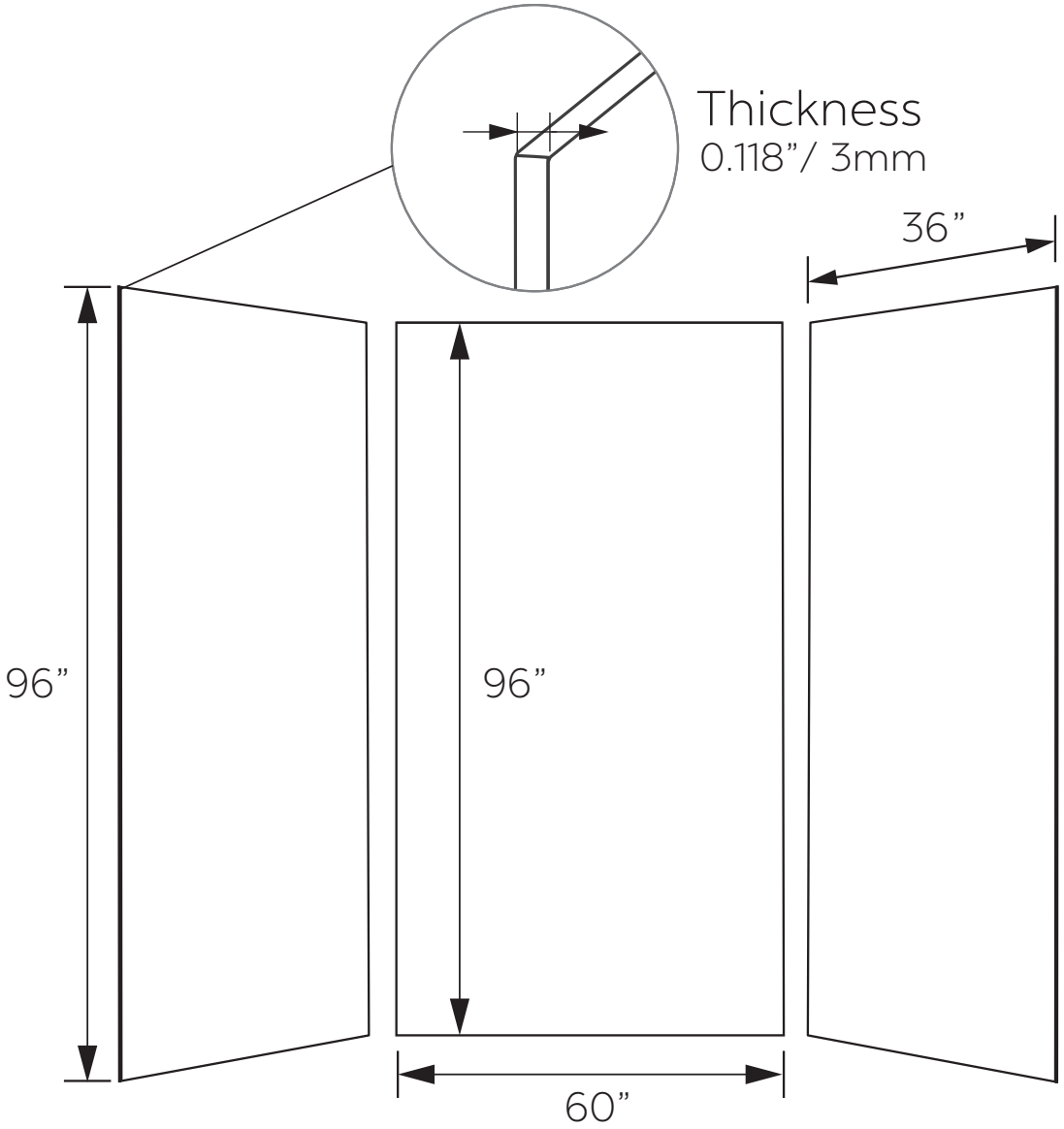

# Key Features

- Easy 3-Flat Panel System Installation
- Glossy finish, Easy Cleaning
- Flat Panels Rolled and Shipped in 24” x 24” x 61” USA or Canada

Senoplast's senosan® 3000 is a high-quality multi-layer composite sheet made from ABS and PMMA, designed for demanding applications in the sanitary and wellness sectors. This material offers a brilliant sanitary acrylic surface, providing excellent optical effects and a warm touch. It boasts high chemical resistance, impact strength, and long-term durability, making it suitable for products like shower cubicles, bathtubs, wash basins, and shower walls

High Impact Resistance

Discoloration Resistant

100% Waterproof

Warm to Touch Surface

Recyclable and Repairable

# Three-Layer Build

Ⓐ UV Cured Top Coat

Ⓑ Virgin White ABS Acrylic

Ⓓ Recycled ABS Acrylic

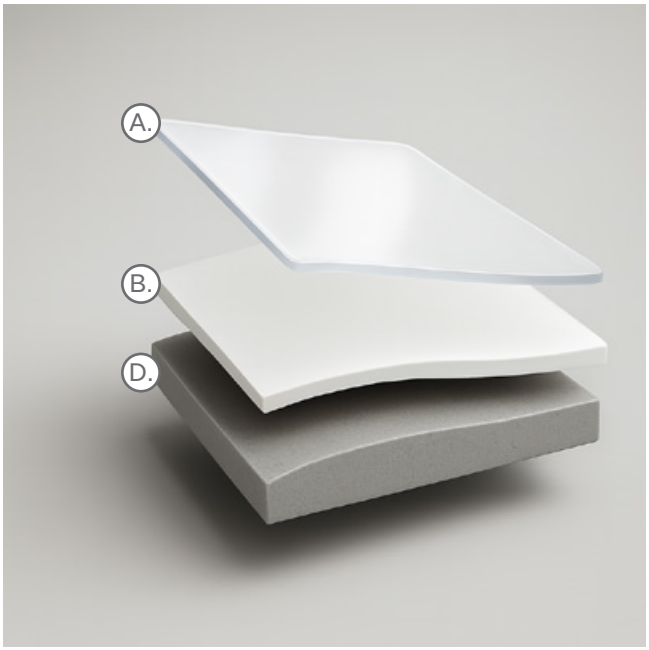

# Special Order Only - Call 1 312-800-8827

## 1.5" Edge Bend Acrylic Wall Panels
34.5”x60”x96” + (1.5” bend)

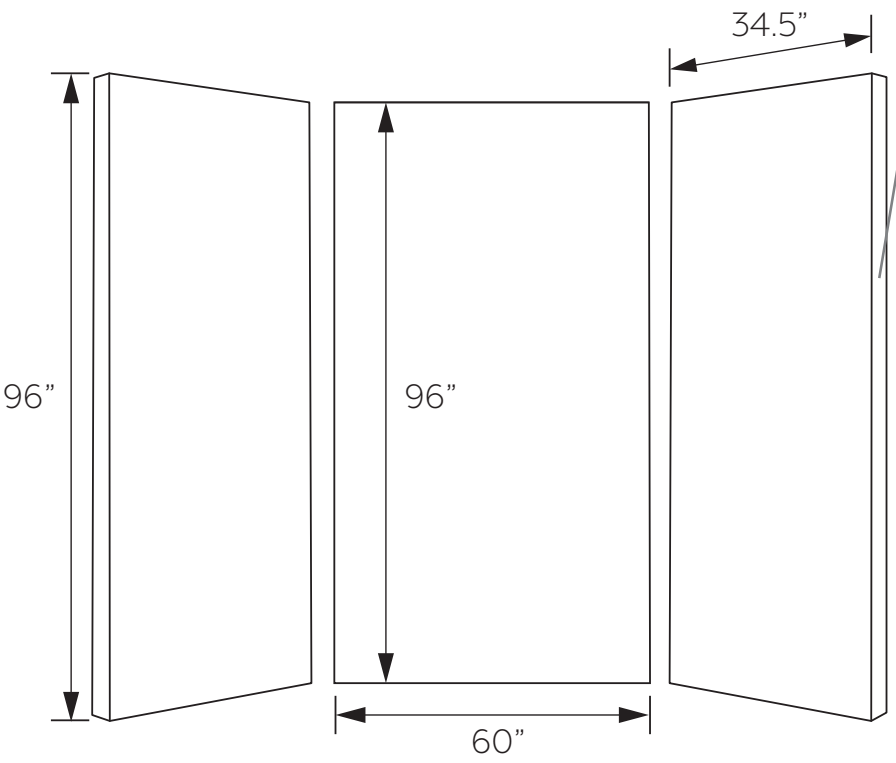


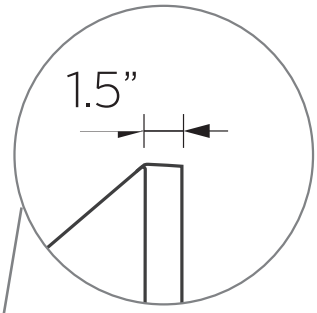


**OPTIONAL**
1.5” FRONT EDGE BEND

An option is available to order both side panels with a 1.5” bend. The front edge of the 36” panel is heated and bent at a 90-degree angle. This 1.5” bend is designed to cover old, existing walls, making installation over old surfaces seamless. The 1.5” 90-degree bend can also be trimmed to the required size, ensuring a perfect fit. However, the kits with a 1.5” bend cannot be rolled and shipped in a box and can only be shipped on a crate, which will significantly increase the shipping cost.

## RECOMENDED ADHESIVE & SEALANT (Not Included) for info call +1 312-800-8827




RTV-7500
HIGH PERFORMANCE
100% RTV SILICONE




Silco Eco-Flex 9599
Hybrid Adhesive/Sealant
20oz Sausage

## Aditional Single Panels Available

- Side Wall 36” x 96”
- Back Wall 60” x 96”
- Celling Panel 36” x 60”

# Maintenance

**Daily Maintenance**
After each shower, rinse the walls with clean water to reduce soap and mineral buildup.
Use a soft squeegee or microfiber cloth to remove excess water and maintain a spotless appearance.

**Weekly Cleaning**
Clean your IntellaStone walls once a week using non-abrasive, pH-neutral cleaners.
Recommended options include:
• Warm water with a few drops of Dawn® or similar dish soap
• Method® Bathroom Cleaner
• Seventh Generation® Bathroom Cleaner
• Simple Green® (diluted according to instructions)
Use a soft sponge or microfiber cloth. Rinse thoroughly and dry with a clean towel.

**Do Not Use:**
Avoid any products that could damage the acrylic surface:
• Abrasive powders or pastes (e.g., Comet®, Bar Keepers Friend®)
• Harsh chemicals such as bleach, ammonia, or acetone
• Solvent-based or petroleum-based cleaners
• Abrasive pads, steel wool, or rough sponges
• Magic Erasers® (unless used gently and only after spot-testing)

**For Hard Water or Soap Buildup**
Mix a 50/50 solution of white vinegar and warm water in a spray bottle.
Apply to affected areas, let sit for 10-15 minutes, then wipe with a soft cloth and rinse well.

**IMPORTANT**
Use of abrasive cleaners, rough tools, or chemical solvents will void the product warranty. Always stick to gentle, acrylic-safe products for optimal care.

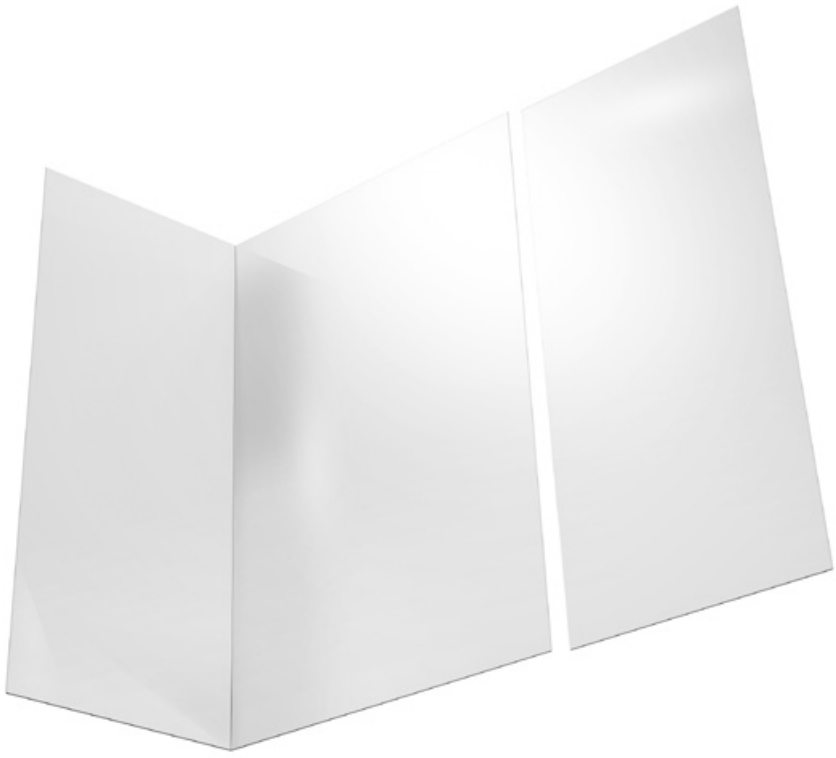

For additional accessories, matching silicon and adhesive contact:

Toll Free: 800-480-6850
Office Direct: 312-800-8827
ellasbubbles.com

# Product Certifications

Senoplast is certified under ISO 9001, which sets the criteria for a quality management system. This certification ensures that products and services meet customer and regulatory requirements.senoplast.com+1 railway-news.com+1
Icon Suggestion: ISO 9001 logo or a simple checkmark with "Quality Management" text.

Senoplast has been certified under ISO 14001, indicating a commitment to effective environmental management systems. This certification helps organizations improve their environmental performance through more efficient use of resources and reduction of waste.

senosan® 3000 meets the requirements of EN 13559, a European standard that specifies the requirements for sheets used in sanitary applications, ensuring product safety and performance.

The antibac® variant of senosan® 3000 has been tested according to ISO 22196, demonstrating a reduction of up to 99.99% in bacterial growth.

senosan® 3000 is recyclable and repairable, aligning with sustainable practices. Surface damage can be easily repaired using 2-component polymerization adhesives.

Senoplast has been appraised under the European Union's EMAS (Eco-Management and Audit Scheme) and holds a Dun & Bradstreet rating, confirming its reliability and stability.senoplast.com

## senosan® – Unlimited possibilities!

Senoplast offers a wide range of applications in the area of sanitary and wellness. The emphasis is on development and marketing of high value plastic sheets for applications in the sanitary and solaria industry.

Due to constant product innovations over the course of recent years, Senoplast has established itself as quality and market leader in this branch.

The brand name **senosan®** is a synonym for highest quality and customer-made solutions – the sheets produced by Senoplast captivate by outstanding design and innovation!

## The Green Spirit

Almost all **senosan®** products are 100% recyclable. For many customers, the re-use of regrind is an environmentally friendly and economical alternative. Edge sections and milling waste, which remain after the thermoforming process, can be granulated and recycled. It should be taken care to clearly separate regrind of different raw materials like ABS or ABS/PMMA from each other.




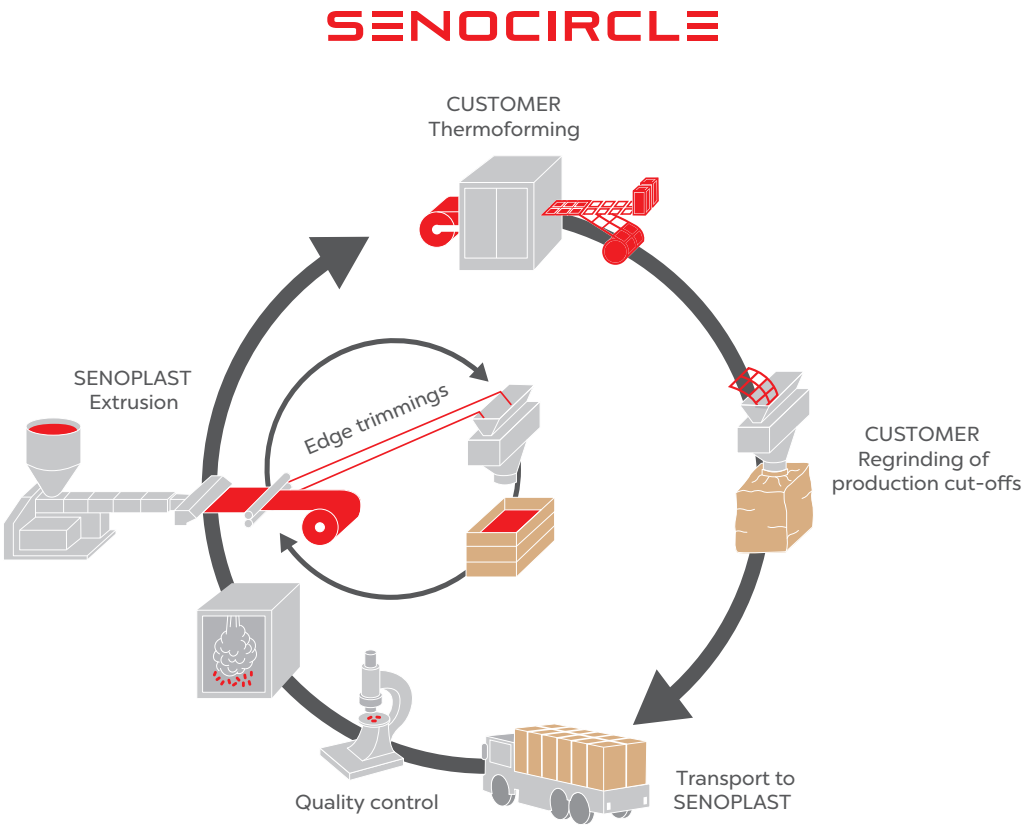

## senosan® with antibacterial surface

A further enhancement of our **senosan®** sheets is the added value of providing an antibac surface to meet the challenging environments of use.

These multilayer composites consist of a main extrusion ABS layer and a co-extruded high-gloss PMMA top layer with good stress-cracking resistance as well as an easyglide rear side. senosan® 3000 antibac features a high chemical resistant, impact modified PMMA top layer and meets the requirements of EN 13559*. One of the most outstanding properties of the senosan® antibac sheets is the antimicrobial surface, that is up to 99.99% germ-reducing according to ISO 22196.

Possible applications are shower trays, wall liners, shower cubicles, bath panels, hand basins and bathtubs.



ADVANTAGES

» Surface is protected from attack by microbes
» Antimicrobial effect has been tested and confirmed in accordance with ISO 22196 by an independent, certified test institute

Antibac®

### Product overview

| Product | Thickness | Width | Surface | Colors |
|---|---|---|---|---|
| senosan® 3000X antibac®<br>senosan® 2000X antibac® | 2.0 – 11.0 mm | 500 – 2,700 mm<br>further widths on request | smooth, high gloss | all sanitary standard colors<br>limitations may exist for very bright white colors |
| senosan® 3000BM antibac®<br>senosan® 2000BM antibac® | | | | |

*EN 13559 is valid from sheet thickness of 2.7 mm
senosan® 3000 antibac® meets the requirements of EN 13559
senosan® 2000 antibac® does not meet the requirements of EN 13559

E. coli

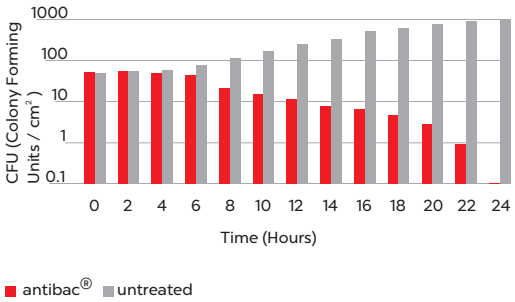


S. aureus

