# White Grab Bar Valve Kit

*New Construction One-Piece Showers*

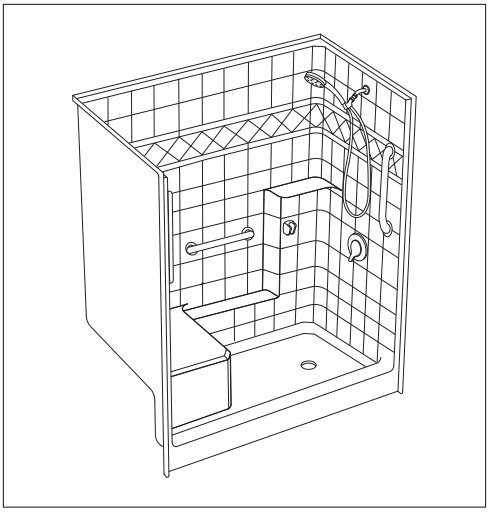

## Specification Manual

## 60″x 36″x 77″

Low Threshold Shower Stall & Kit

*White Package with White Grab Bars and Shower Valve Kit*

For more product information visit ellasbubbles.com
or call Ella's Bubbles toll free at 1-800-480-6850

ella
by ella's bubbles

# White Grab Bar Valve Kit

60″ x 36″ x 77″ New Construction One-Piece Shower
*White Package with White Bars and Shower Valve Kit*

ella
by ella's bubbles

## HANDED BY SEAT

Right–Hand Seat Shown

Shipping Container

Preassembled Valve & Faucet

## Representing Model Numbers

- ESM6036SHLWHT-VPKG3
- ESM6036SHLBON-VPKG3
- ESM6036SHLBIS-VPKG3
- ESM6036SHRWHT-VPKG3
- ESM6036SHRBON-VPKG3
- ESM6036SHRBIS-VPKG3

## Technical Information

Material: Gelcoat Fiberglass
Overall Dimensions: 60 in. x 36 in. x 77 in.
Net Weight: 190 lbs.
Drain Location: Left or Right
Threshold Height: 4 in.
Shipping Dimensions: 67 in. x 43 in. x 84 in.
Shipping Weight: 330 lbs.

## Shower Stall and Package Options

### Available Colors

** Color tiles intended for reference only.*

| White - WHT | Bone - BON | Biscuit - BIS |
|---|---|---|

### Available Packages

Standard
Standard Valve Kit
Classic Grab Bar Kit
Classic Valve Kit
Ultimate Grab Bar Kit
Ultimate Valve Kit
White Grab Bar Kit
White Grab Bar Valve Kit
Imperial Grab Bar Kit
Imperial Valve Kit

## Warranty

- Ella's Shower Stall: Three (3) Year Limited Warranty
- Zurn Valve: Three (3) Year Warranty
- Hansgrohe Shower Items: One (1) Year Warranty

** For more information please visit ellasbubbles.com*

## Codes

This unit shall meet UPC, CSA B45.5, IAPMOZ124–11, Home Innovation Research Lab, and shall meet the requirements of the Southern Building Code.

**MANUFACTURED AND ASSEMBLED IN THE UNITED STATES OF AMERICA**

# White Grab Bar Valve Kit

60″ x 36″ x 77″ New Construction One-Piece Shower

*White Package with White Bars and Shower Valve Kit*

ella by ella's bubbles

## PACKAGE ACCESSORIES

Zurn Shower Lever Handle and Etched Cover Plate

Zurn Pressure Balancing Quick Connect Valve

Hansgrohe Croma E 100 3–Jet Handshower

Hansgrohe Techniflex Hose – 63 in.

Hansgrohe Showerarm and Cover Plate – 6 in.

Hansgrohe Showerarm Mount for Handshower

Hansgrohe E Wall Mount Handshower Bracket

Chrome Strainer Brass Drain with Friction Seal – 2 in.

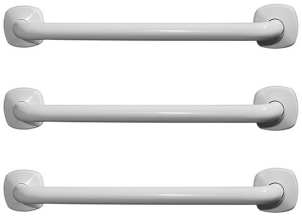

White Straight Grab Bars (3) – 18″

For more product information on these accessories please visit www.hansgrohe.com or www.zurn.com

hansgrohe ZURN

Ella's Bubbles, LLC reserves the right to make revisions without notice to product specifications.
For the most current Specification Manual, go to ellasbubbles.com.

USA/Canada: **1-800-480-6850**

September 15, 2016

# White Grab Bar Valve Kit

60″ x 36″ x 77″ New Construction One-Piece Shower

*White Package with White Bars and Shower Valve Kit*

by ella's bubbles

## SPECIFICATION DRAWINGS

Due to the nature of the materials, dimensions may vary ± ½ in.

FRONT VIEW

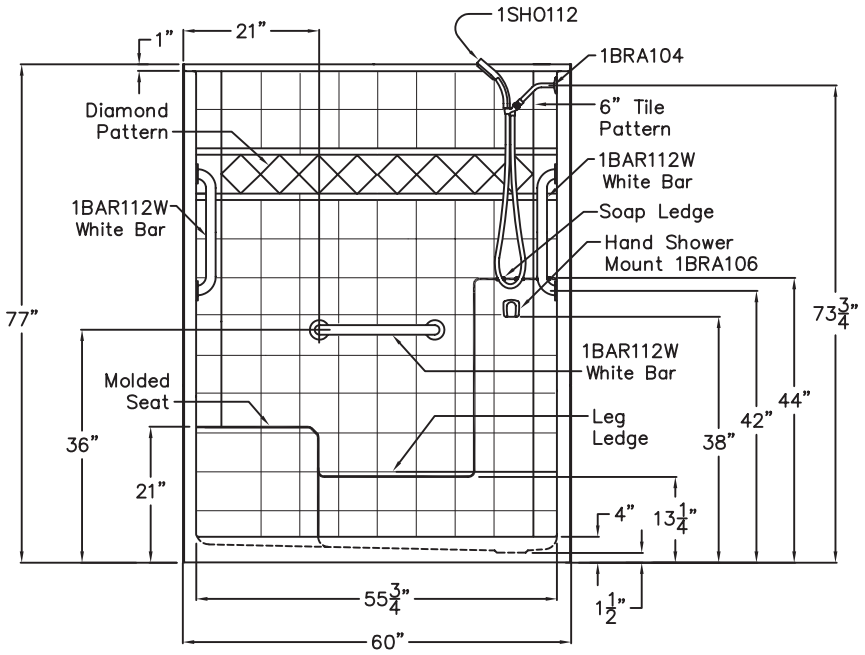


SIDE VIEW

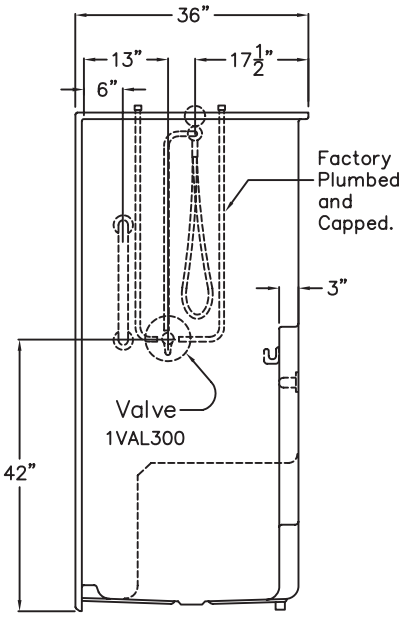


TOP VIEW

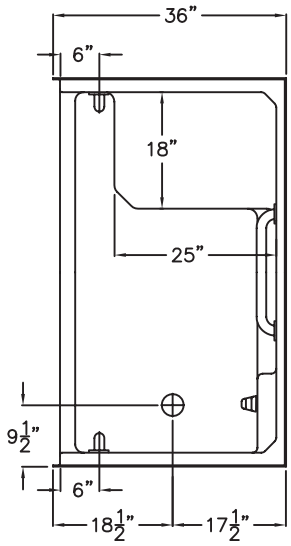


4″ LOW THRESHOLD

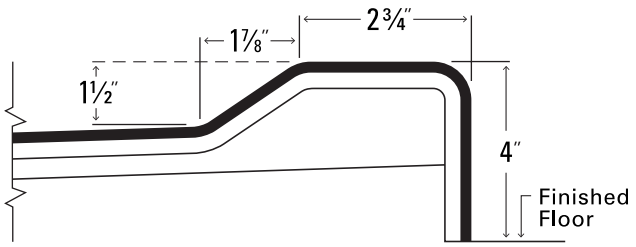

# White Grab Bar Valve Kit

60″ x 36″ x 77″ New Construction One-Piece Shower

*White Package with White Bars and Shower Valve Kit*

by ella's bubbles

## BOARD PLACEMENT DRAWING

Due to the nature of the materials, dimensions may vary ± ½ in.

FRONT VIEW

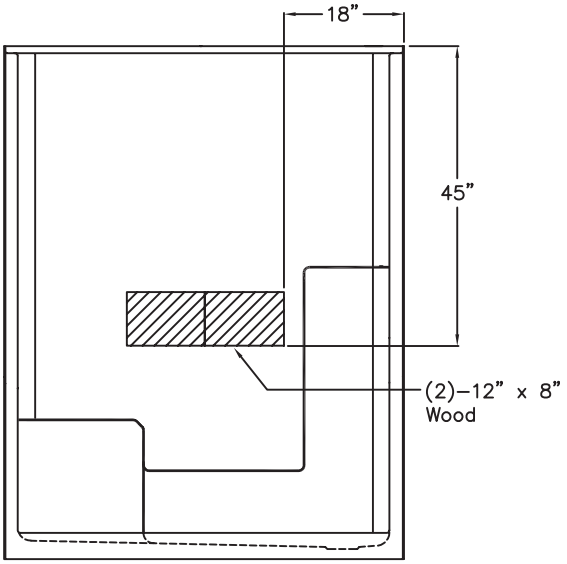


SIDE VIEW

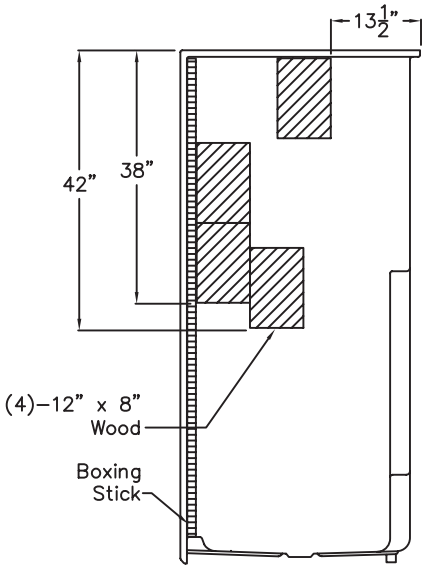


SEAT SIDE VIEW

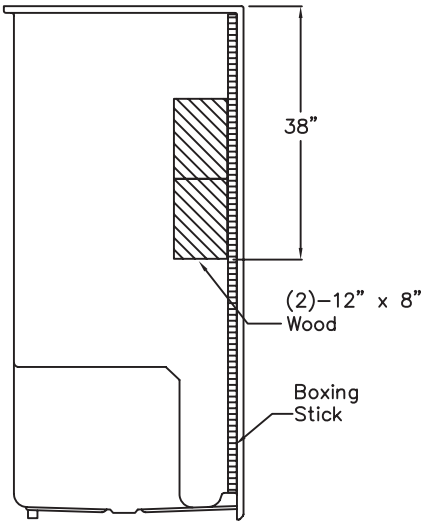

# White Grab Bar Valve Kit

60″ x 36″ x 77″ New Construction One-Piece Shower

*White Package with White Bars and Shower Valve Kit*

ella by ella's bubbles

## PRODUCT FEATURES

### Luxurious & Safe Design

- Architectural subway design tile pattern with diamond accent pattern for a traditionally modern aesthetic
- Integrated Grip Sure™ floor texture for safe mobility
- Molded soap, shampoo & foot ledges for added convenience

### Strength & Durability

- Premium marine-grade, gelcoat & fiberglass polyester resin for a beautiful, long-lasting shower surface
- Reinforced 3/8″ wood paneled walls provides flexibility for installing grab bars at any needed height
- Twice the weight and the raw materials used in the production of our showers than listed by any of our competitors

### Shower Door Friendly

- Ella's showers are fabricated to allow the options of using a curtain or shower door
- At the base, square corners above the low threshold support framed or frameleess shower door installation

### Availability

- Ella's showers are manufactured, inspected & shipped directly from the factory within 5-7 business days
- Rush orders are available upon request (white only)
- No order is too big or too small

### Contractor Friendly

- Ella's One-Piece showers are preassembled at the factory and require no hardware installation on jobsite
- Compact and durable packaging for easy handling on the jobsite
- Shipped in heavy duty crating to protect the product in transit