ELLA'S MILLENNIAL SERIES

New Construction One-Piece Showers

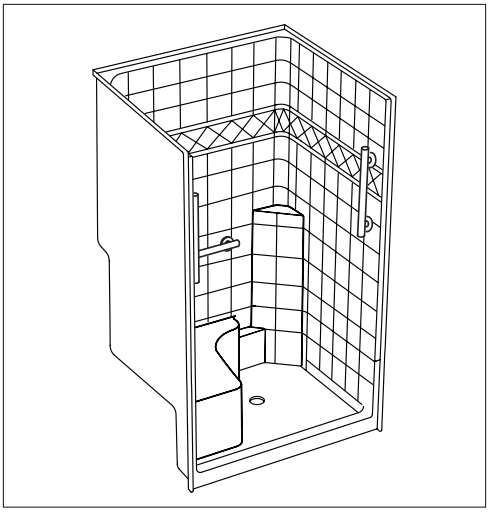

Specification Manual

48″x 37″x 80″

Low Threshold Shower Stall & Kit

Century Stone Freedom Package with Brushed Nickel Grab Bars

For more product information visit ellasbubbles.com
or call Ella's Bubbles toll free at 1-800-480-6850

ella
by ella's bubbles

Ella's Millennial Series

48" x 37" x 80" New Construction One-Piece Shower

Century Stone Freedom Package with Brushed Nickel Grab Bars

ella by ella's bubbles

HANDED BY SEAT

Left-Hand Seat Shown In Cotton Seed

Shipping Container

Preassembled Valve & Faucet

Representing Model Numbers

3648R1S-CSC-FRN	3648R1S-CSB-FRN
3648L1S-CSC-FRN	3648L1S-CSB-FRN

Technical Information

Material: Gelcoat Fiberglass
Overall Dimensions: 48 in. x 37 in. x 80 in.
Net Weight: 185 lbs.
Drain Location: Center
Threshold Height: 4 in.
Shipping Dimensions: 53 in. x 42 in. x 84 in.
Shipping Weight: 305 lbs.

Shower Stall and Package Options

Available Colors

** Color tiles intended for reference only.*

Cotton Seed

Beach

Available Packages

Standard, Standard–SA, Freedom, Freedom-SA, Freedom Brushed Nickel, Freedom Oil Rubbed Bronze

Warranty

- Ella's Millennial Century Stone Shower Stall: Ten (10) Year Limited Warranty

  ** For more information please visit ellasbubbles.com*

Codes

This unit shall meet UPC, CSA B45.5, IAPMOZ124–11, Home Innovation Research Lab, and shall meet the requirements of the Southern Building Code.

MANUFACTURED AND ASSEMBLED IN THE UNITED STATES OF AMERICA

Ella's Millennial Series

48″ x 37″ x 80″ New Construction One-Piece Shower

Century Stone Freedom Package with Brushed Nickel Grab Bars

PACKAGE ACCESSORIES

Grabcessories Brushed Nickel Grab Bar (3) – 16″

Brushed Nickel 2-in1 Shower Valve Grab Bar

Chrome Strainer Brass Drain with Friction Seal – 2 in.

For more product information on these accessories please visit www.grabcessories.com, www.hansgrohe.com or www.zurn.com

Ella's Bubbles, LLC reserves the right to make revisions without notice to product specifications.
For the most current Specification Manual, go to ellasbubbles.com.

USA/Canada: **1-800-480-6850**

September 15, 2016

Ella's Millennial Series

48″ x 37″ x 80″ New Construction One-Piece Shower

Century Stone Freedom Package with Brushed Nickel Grab Bars

ella by ella's bubbles

SPECIFICATION DRAWINGS

Due to the nature of the materials, dimensions may vary ± ½ in.

FRONT VIEW

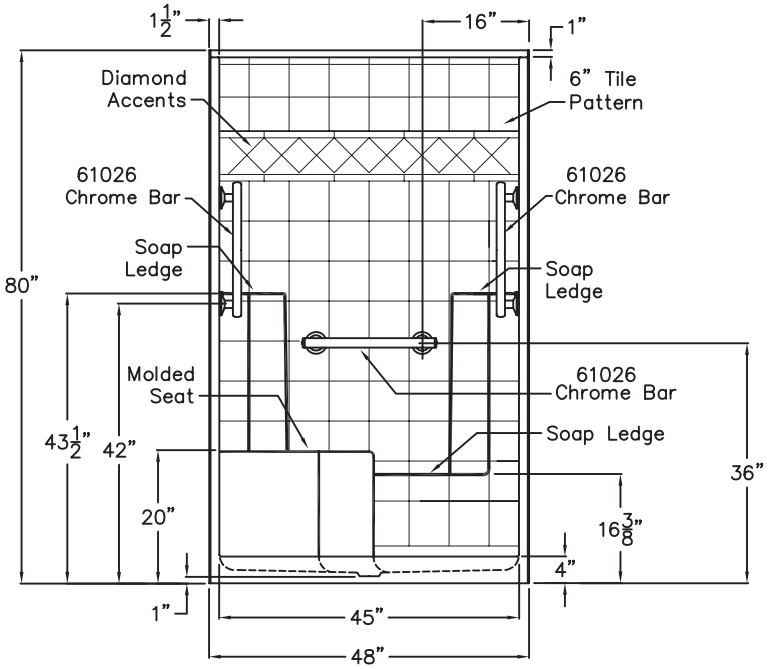

SIDE VIEW

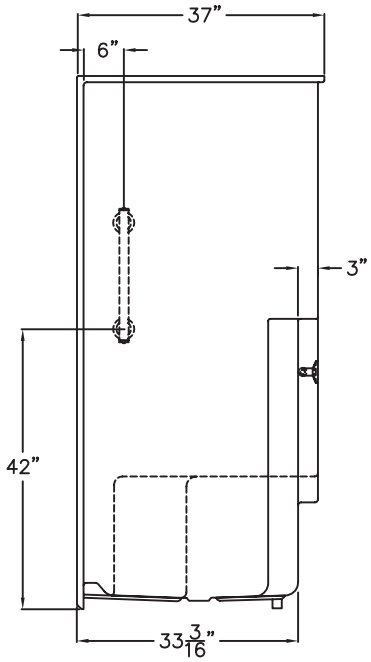

4″ LOW THRESHOLD

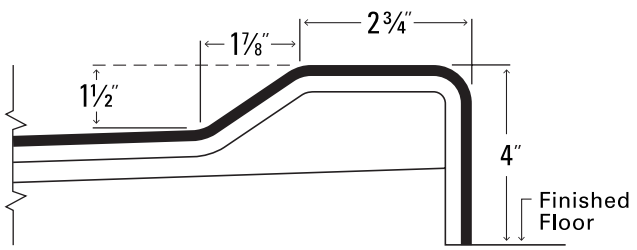

TOP VIEW

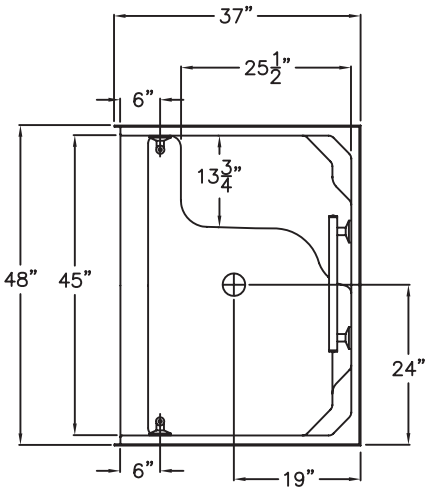

Ella's Millennial Series

48″ x 37″ x 80″ New Construction One-Piece Shower

Century Stone Freedom Package with Brushed Nickel Grab Bars

by ella's bubbles

BOARD PLACEMENT DRAWING

Due to the nature of the materials, dimensions may vary ± ½ in.

FRONT VIEW

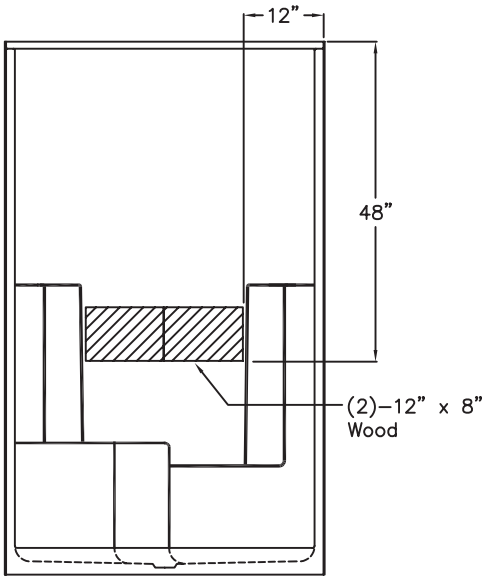

SIDE VIEW

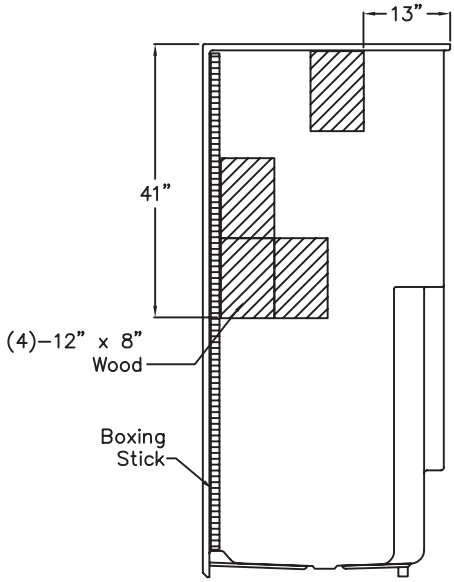

SEAT SIDE VIEW

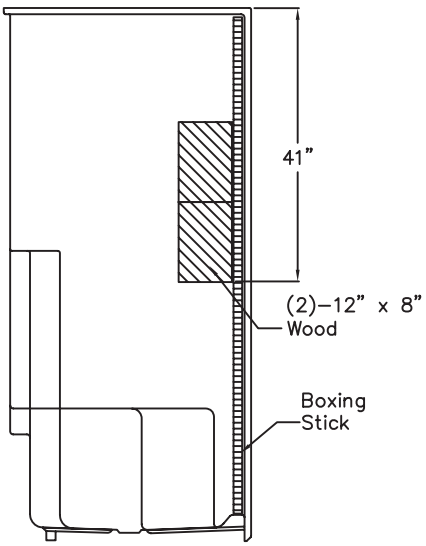

Ella's Millennial Series

48" x 37" x 80" New Construction One-Piece Shower

Century Stone Freedom Package with Brushed Nickel Grab Bars

ella by ella's bubbles

PRODUCT FEATURES

Luxurious & Safe Design

- Architectural subway design tile pattern with diamond accent pattern for a traditionally modern aesthetic
- Integrated Grip Sure™ floor texture for safe mobility
- Molded soap, shampoo & foot ledges for added convenience

Strength & Durability

- Premium marine-grade, gelcoat & fiberglass polyester resin for a beautiful, long-lasting shower surface
- Reinforced 3/8" wood paneled walls provides flexibility for installing grab bars at any needed height
- Twice the weight and the raw materials used in the production of our showers than listed by any of our competitors

Shower Door Friendly

- Ella's Millennial Series showers are fabricated to allow the options of using a curtain or shower door
- At the base, square corners above the low threshold support framed or frameleess shower door installation

Availability

- Ella's Millennial Series showers are manufactured, inspected & shipped directly from the factory within 5-7 business days
- Rush orders are available upon request (white only)
- No order is too big or too small

Contractor Friendly

- Ella's Millennial Series One-Piece showers are preassembled at the factory and require no hardware installation on jobsite
- Compact and durable packaging for easy handling on the jobsite
- Shipped in heavy duty crating to protect the product in transit

Ella's Bubbles, LLC reserves the right to make revisions without notice to product specifications.