2 Panel BathScreen
Installation Instructions

AMLUXX

Size:55"x39"

● Please read these instructions in full before installing

IMPORTANT

- Check that the bathtub has been installed to the manufacturer's instructions.
  Please note - All product is supplied without a tray.
- Opening wall adjustments
  2 panel Bath screen adjustment =38.19"-39"(970-990mm)

GENERAL SAFETY INSTRUCTIONS

- Do not fix the wall profile to newly plastered, painted or papered walls as chemical reaction may cause discolouration to the surface finish.
- Important: The wall plugs included in this pack are for solid walls only. If the product is to be mounted on a partition or stud wall, specialised fixings should be purchased separately.
- Fixing tips; A piece of insulating tape or a couple of layers of masking tape applied to the wall before marking out the fixing holes will help stop the drill from wandering, particularly on tiled surfaces.
- When working near a basin or bath insert the plug into the waste, this will help you avoid losing small parts. Also take care not to drop accessories or tools onto the bath or basin, use a towel or bathmat to protect delicate surfaces.
- CAUTION!
  Before drilling into any walls check that there are no hidden cables or pipes. Exercise great care when using power tools near water. The use of a residual current device (RCD) or cordless drill is recommended. Always double check the positioning and measurements before drilling holes.
- This product is heavy and requires two people during lifting and operations.
- Glass is delicate, support on cardboard to minimise risk of damage.

Tools required (not supplied)

Electric drill	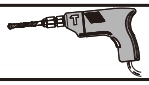	Tape measure	
Drill(Ø3.2mm)		Rubber hammer	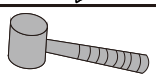
Drill(Ø6mm)	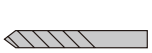	Knife	
Cross head screw driver		Pencil	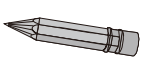
Spirit level		Silicone sealant	

IDENTIFICATION OF PARTS

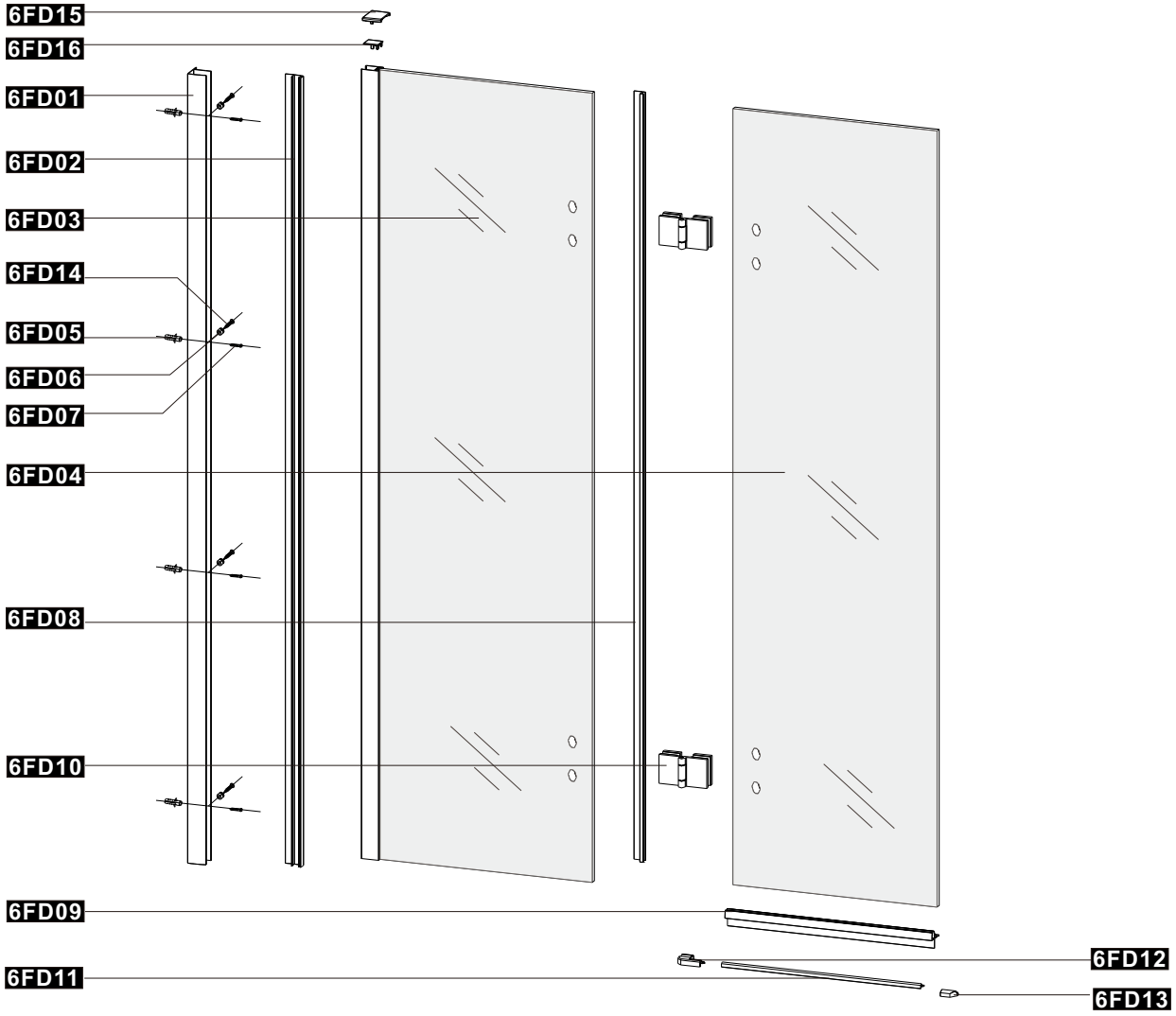

Fixings & fittings supplied

Item No.:	Part	Quantity	Item No.:	Part	Quantity
6FD01		X1	6FD10		X 2
6FD02		X1	6FD11		X 1
6FD03		X 1	6FD12	L R	X 1
6FD04		X 1	6FD13	R L	X 1
6FD05		X 4	6FD14	ST4*10	X 4
6FD06		X 4	6FD15	L R	X 1
6FD07	ST4*30	X 4	6FD16		X 1
6FD08		X 1	6FD17	4mm	X 1
6FD09		X 1			

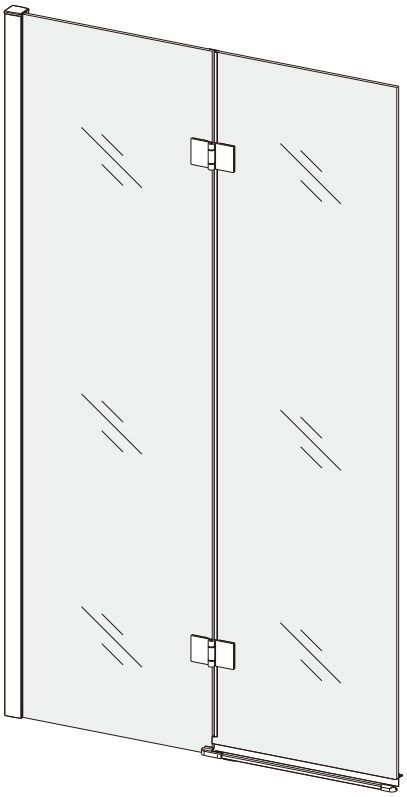

LH

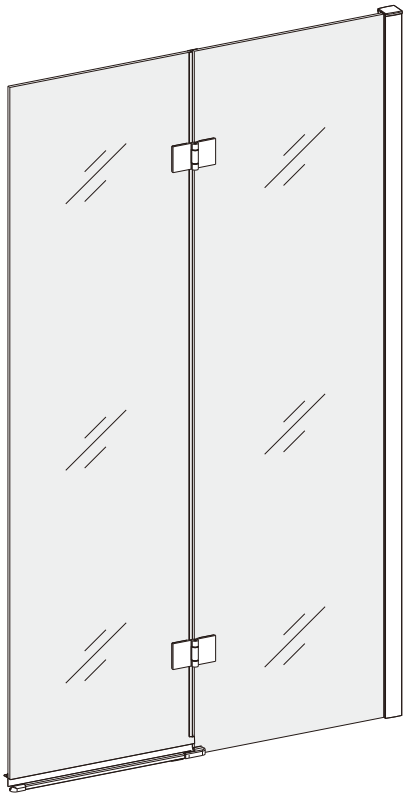

RH

2Panel bath sceen is ok to be installed in left and right hand.Below steps are based on left hand.Please choose the direction and following below steps.

Technical Drawing

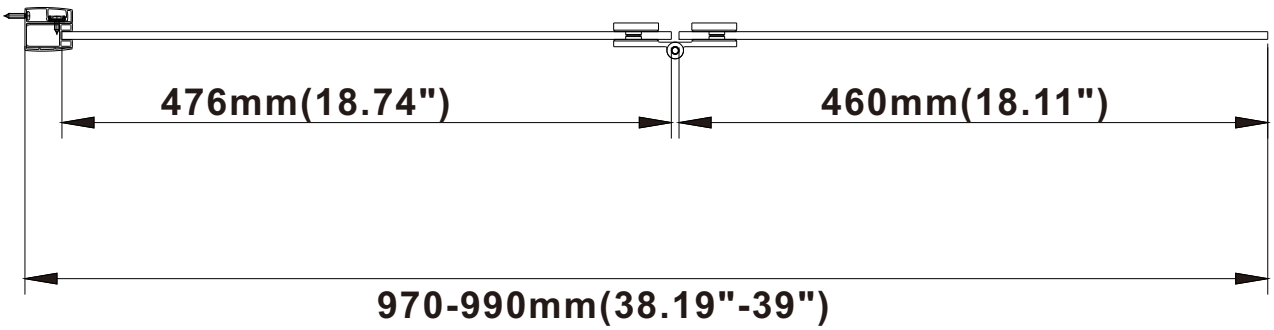

1.

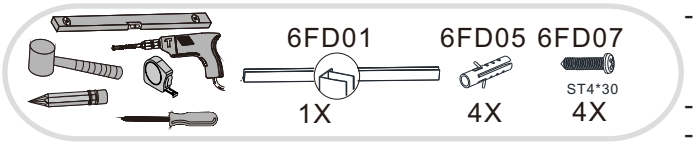

- Put the wall profile 6FD01 against the wall,and make sure the profile to be 10mm away from the outside edge.and ensure it isvertical using a spirit level.
- Mark the holes on the wall.
- Drill the holes(Ø6mm) accordingly.
-Insert the wall plugs 6FD05(4x) in the wall.
-Fix the wall profile 6FD01 on the wall with screws 6FD07(4x) .

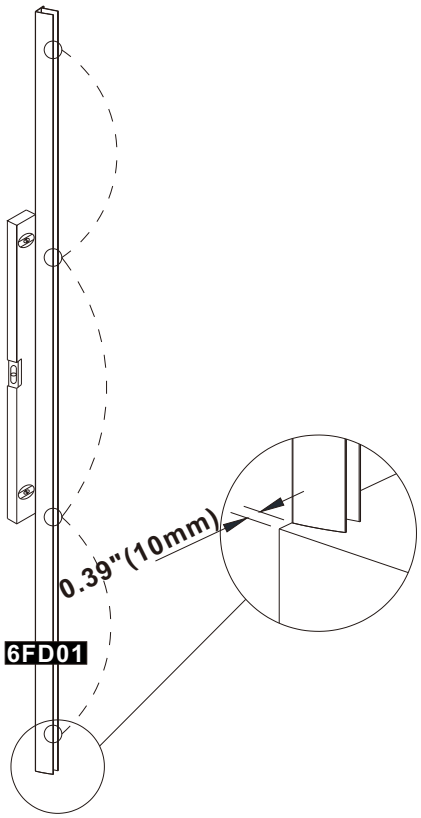

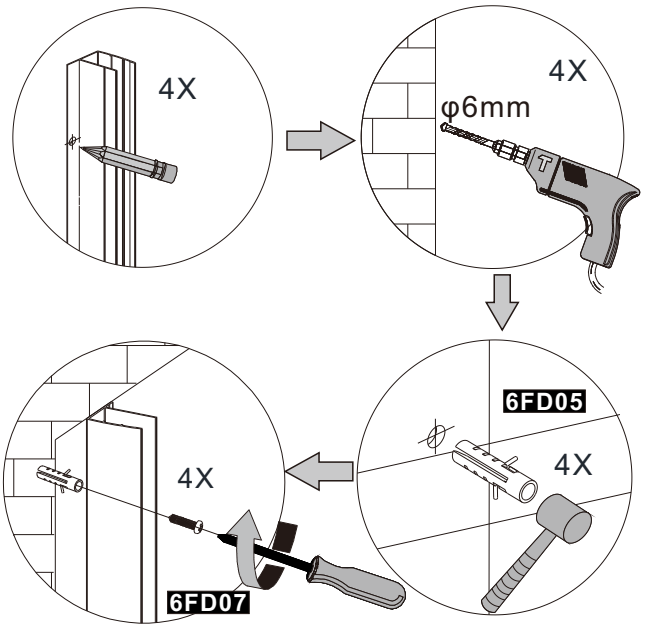

2.

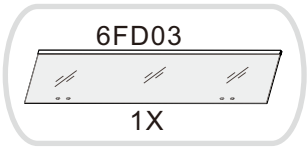

-Insert screen panel 6FD03 into the wall profile.
-There is 20mm(0.79") adjustment between panel and wall profile for any out of true walls.

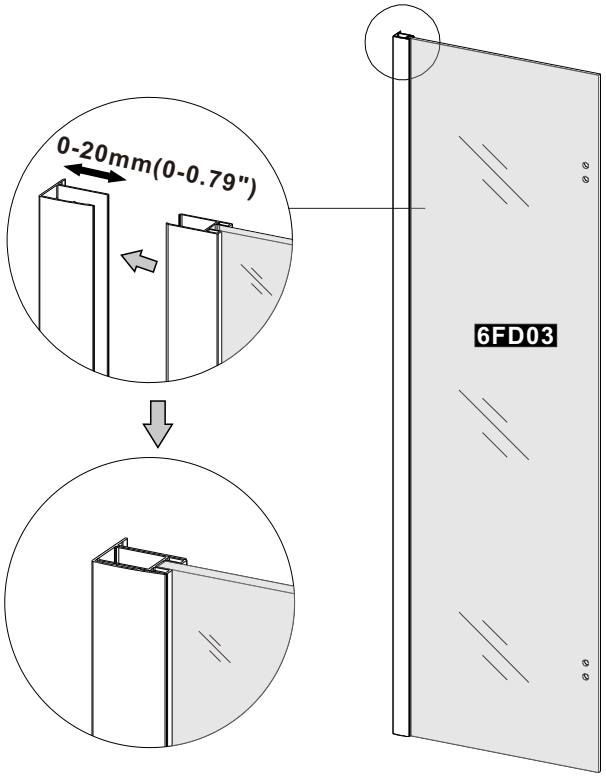

3.

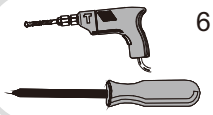

6FD06 X 4

6FD14 ST4*10 X 4

-From inside drill throught the vertical profile and into wall profile where shown,using a 3.2mm drill.
-Fix wall profile and frame together with screws 6FD14(4x) and washers 6FD06(4x)

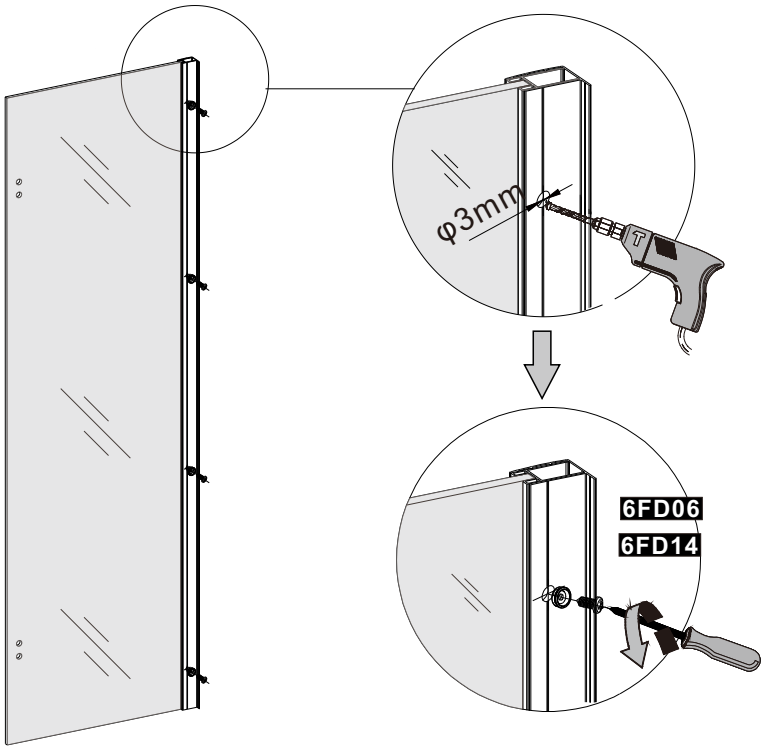

4.

6FD04 X1

6FD10 X 2

6FD17 X1

-Connect the screen panel 6FD03 and 6FD04 with hinges 6FD10(2x).Fasten inner screws with hex key 6FD17.
-Cover the screws with cap from inside.

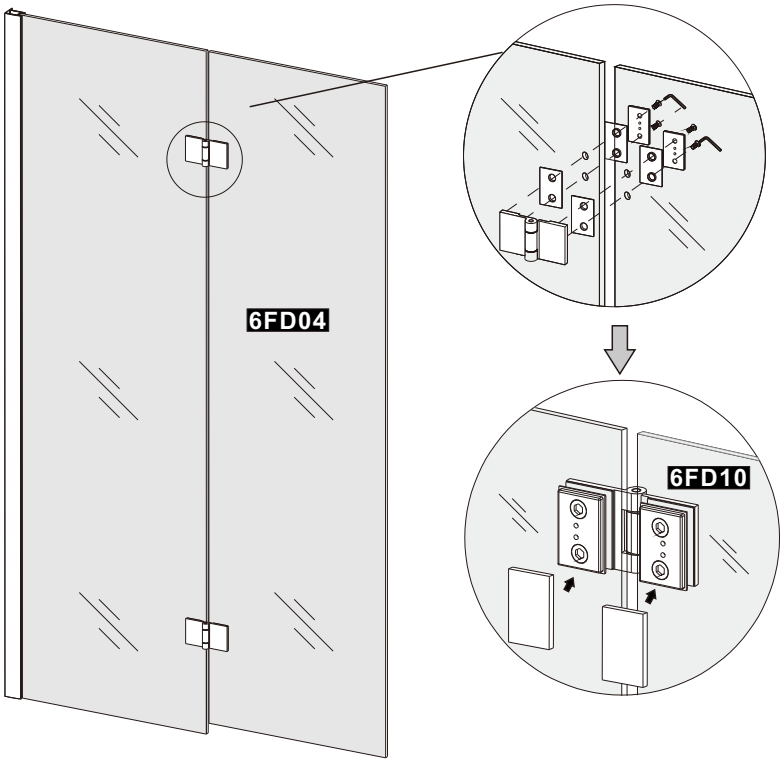

5.

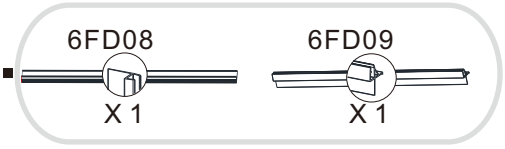

-Attached the vertical anti-water sealer 6FD08 on the screen panel 6FD04
-Attched the bottom anti-water sealer 6FD09 on the screen panel 6FD04.Make sure the vertical sealer is stand on the bottom anti-water sealer.

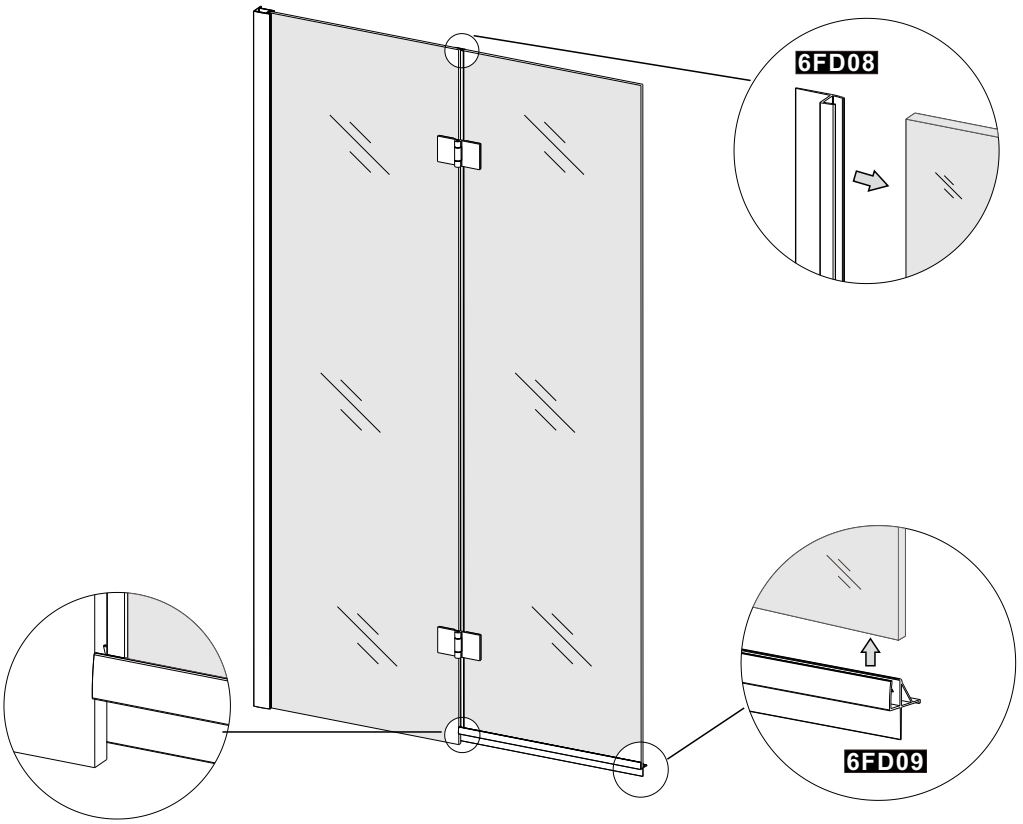

Caution:
The triangle bubble should be mounted towards the inside of the bathtub.

6.

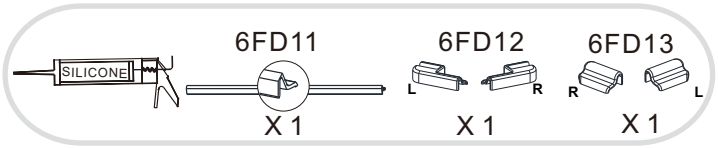

-Connect the bottom anti-water strip 6FD11 with the end caps 6FD12 and 6FD13.
-Apply silicone sealant on the back of strip

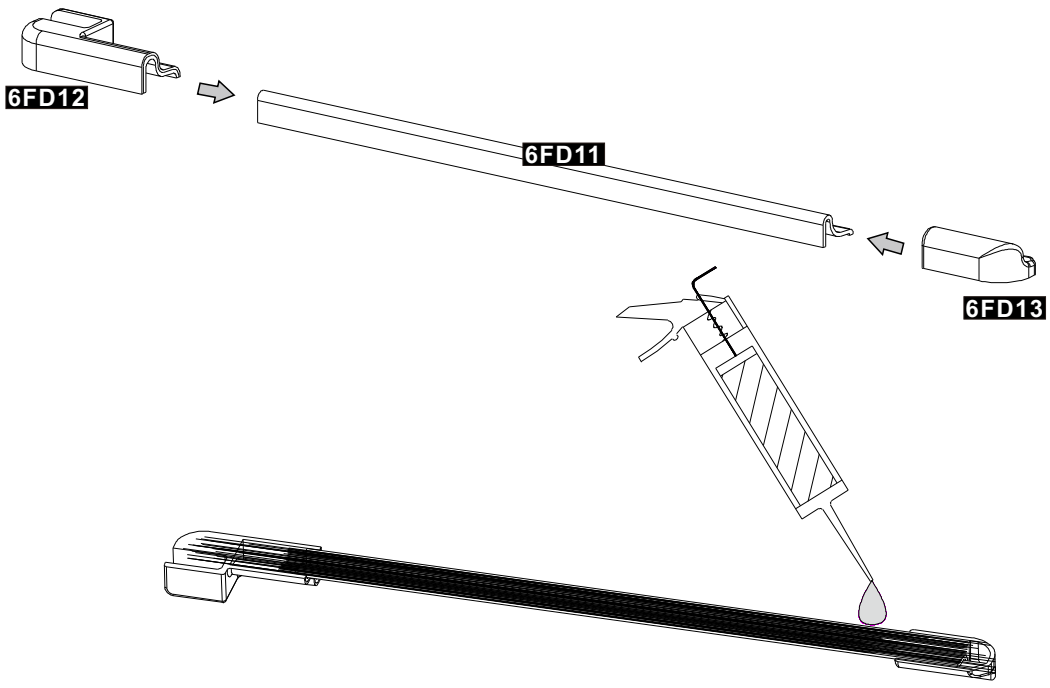

7. -Put bottom anti-water strip on the door bottom.

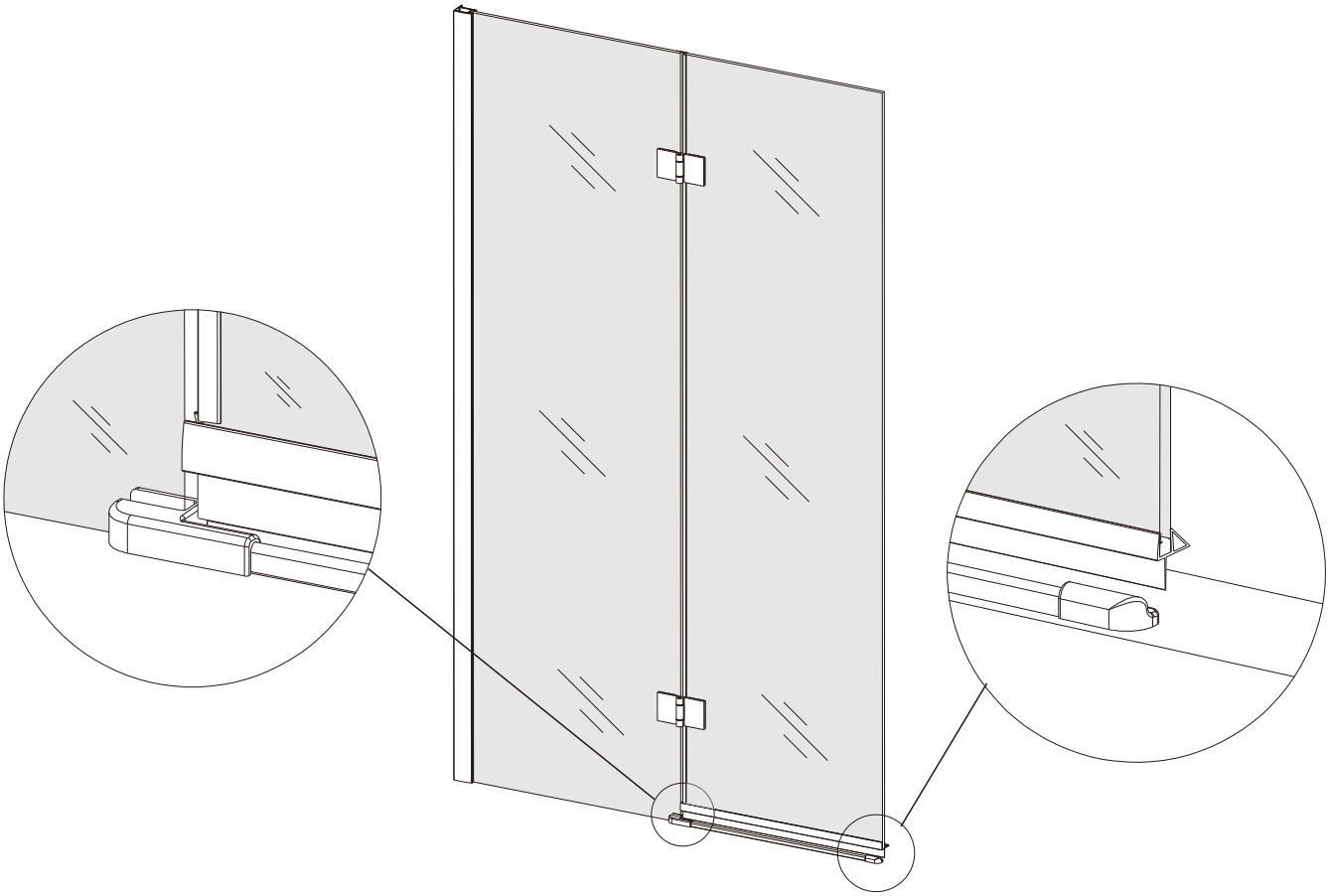

8. 6FD02

X 1

- Cover the wall profile with conceal profile 6FD02 from inside.

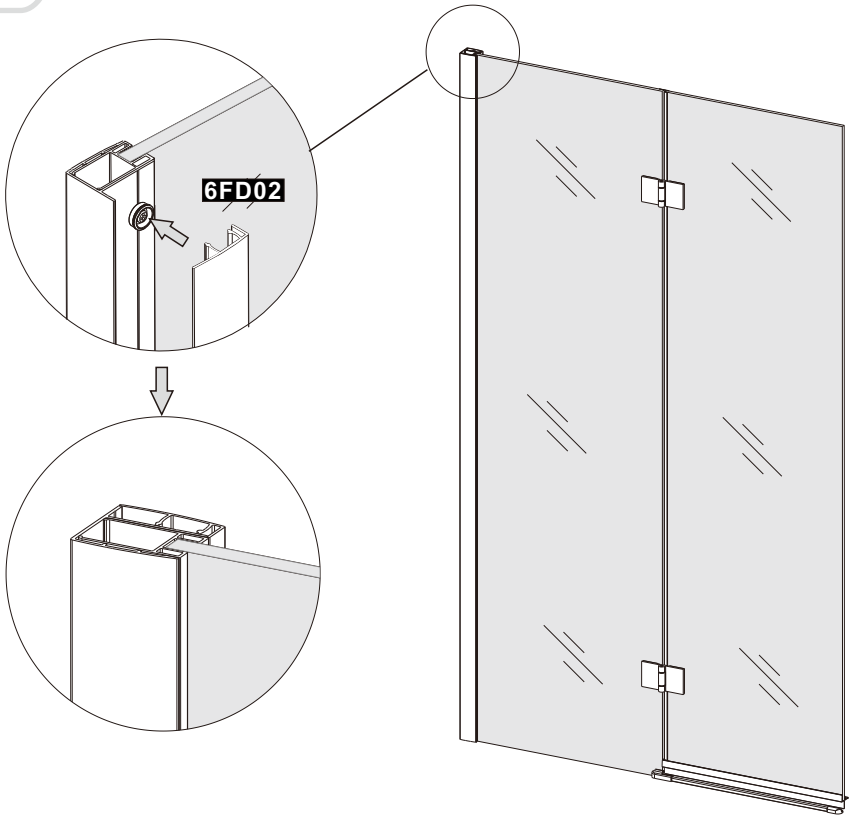

9.

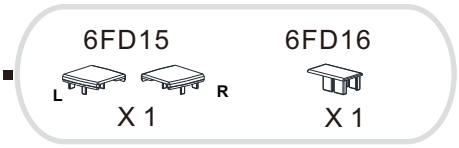

-Put the top cover 6FD15 on the vertical profile first.
-Put the top cpver 6FD16 on the wall profile.

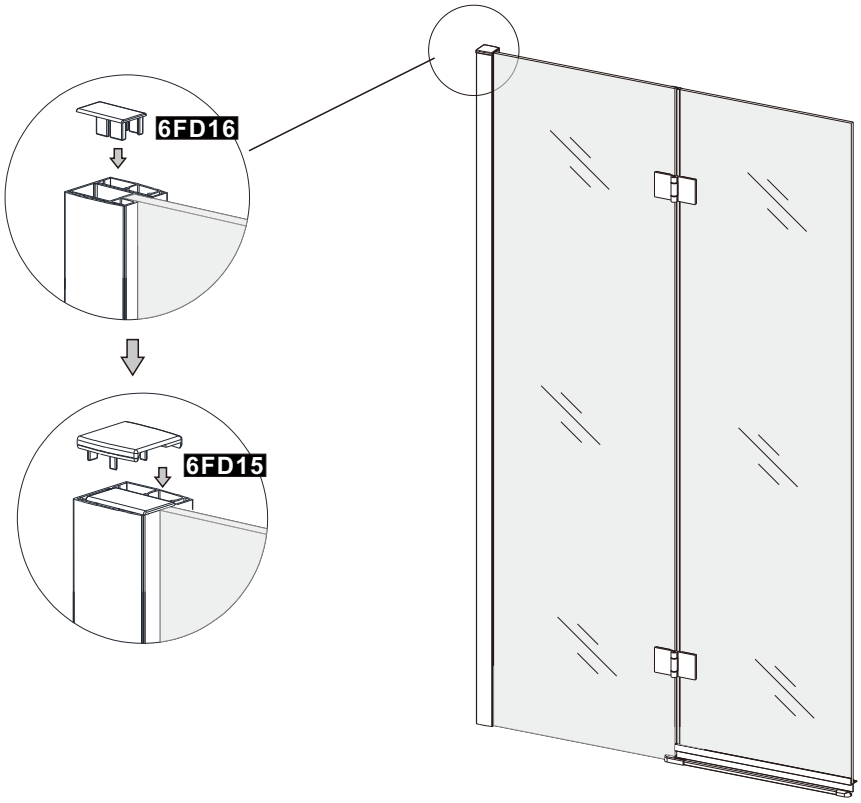

10.

– Apply silicone sealant to the outside of the enclosure. Please note: Do not apply silicone sealant to the inside of the enclosure.Also please do not take shower within 24 hours after apply the silicone.

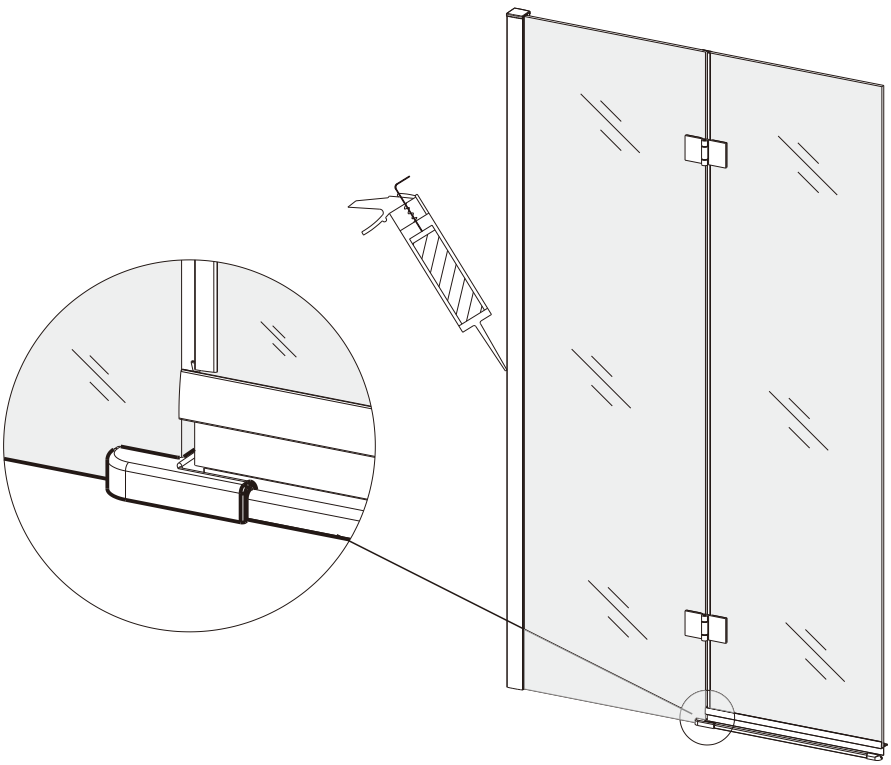

Cleaning and Maintenance:

Please do not use abrasive or strong cleaning solutions on the shower enclosure, such as alcohol, petroleum liquids or any other chemical cleaner.

Should there be any dirty stains on the shower enclosure, please clean it with a soft lint free cloth and warm soapy water. Please rinse it with clean water afterwards.

We have taken great care to ensure that this product reaches you in perfect condition. However should any parts be damaged or missing please contact your point of purchase. This does not affect your statutory rights. In addition if you require replacement parts your point of purchase will be happy to assist.

Technical and Customer Support:1-312-838-8150

V19D15