by ella's bubbles

Ella 4×8 Subway White Cultured Marble 4 Panel Shower Wall Surround

Package - 3

Package - 3 Content: 4 Wall Panels, 3 Shelves & 2" Trims
(three (2) 30"x 2" x ¾", three (3) 60" x 2" x ¾")
Material: Cultured Marble
Pattern: 4"x8" Subway Tile
Color / Finish: White Glossy
Wall Surround Size: 36"Wx60"Lx60"H
Panel Thickness: ¼"
Net Weight: 165 lb.

Shipping Crate Size: 40"W x64"L x12"H
Shipping Weight: 195 lb.

Available Package Options:
Package-4: 4 wall panels & 2" trims

(Packages 1 & 2 not available in 4x8 Subway)

Cultured marble panels and trims can be cut to size. The shelves or panels can be arranged in any layout. See installation manual for directions.

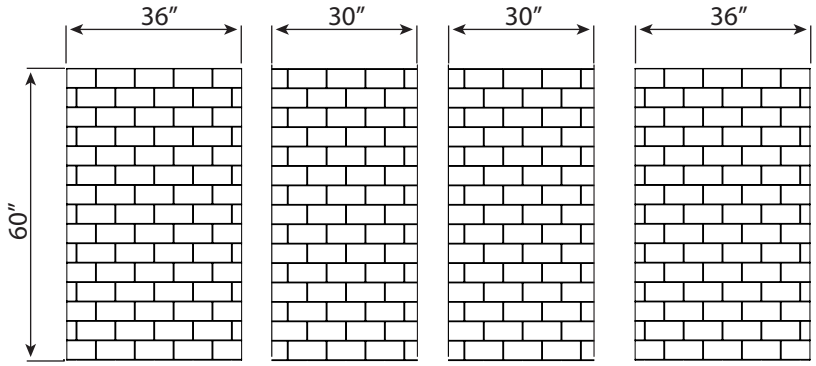

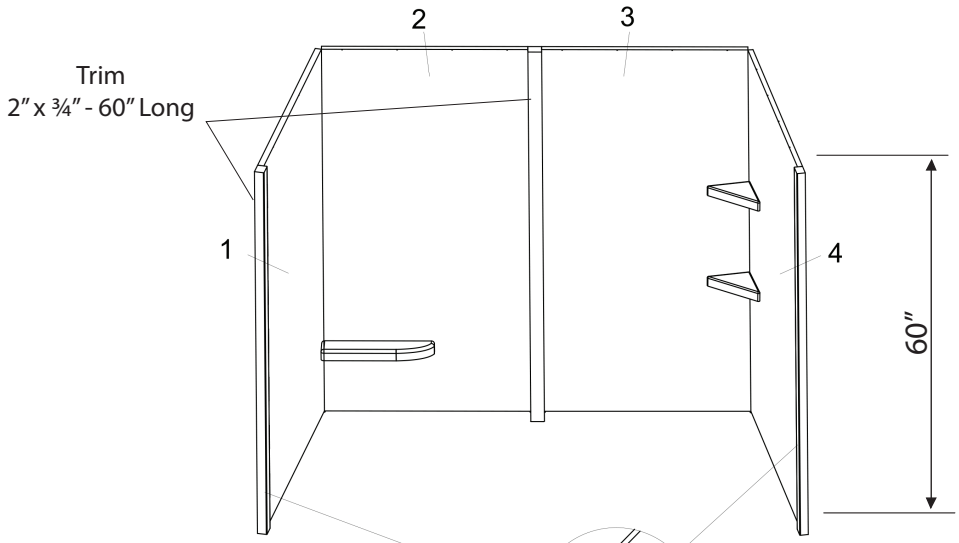

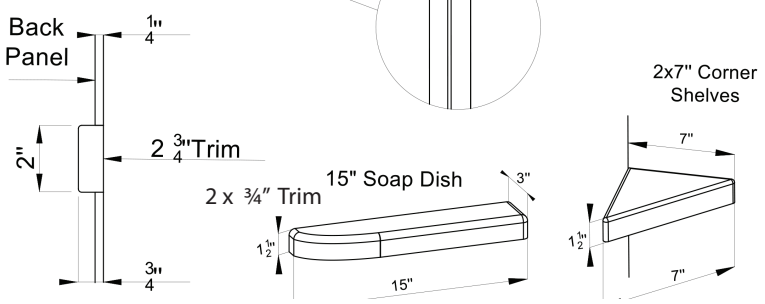

by ella's bubbles

Ella 4×8 Subway White Cultured Marble 4 Panel Shower Wall Surround

Package - 4

Package - 4 Content: 4 Wall Panels & 2" Trims
(three (2) 30"x 2" x ¾", three (3) 60" x 2" x ¾")
Material: Cultured Marble
Pattern: 4"x8" Subway Tile
Color / Finish: White Glossy
Wall Surround Size: 36"Wx60"Lx60"H
Panel Thickness: ¼"
Net Weight: 165 lb.

Shipping Crate Size: 40"W x64"L x12"H
Shipping Weight: 195 lb.

Available Package Options:
Package-3: 4 wall panels, 3 shelves & 2" trims

(Packages 1 & 2 not available in 4x8 Subway)

Cultured marble panels and trims can be cut to size.

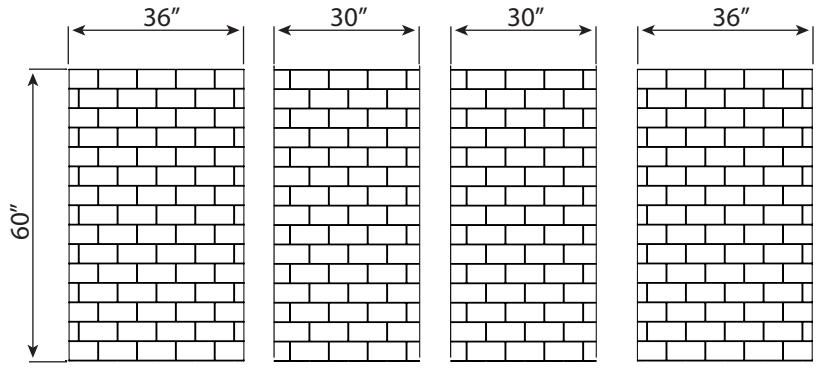

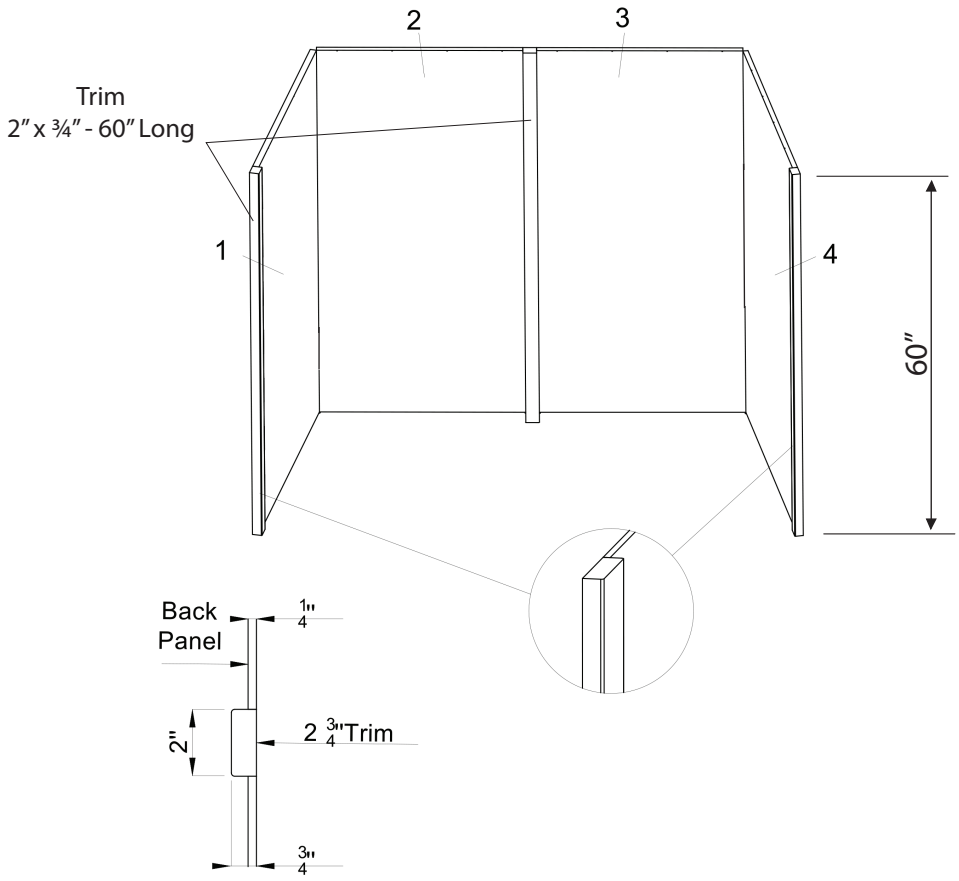

by ella's bubbles

Installation of Shower Panels with 30", 32", & 34" Base

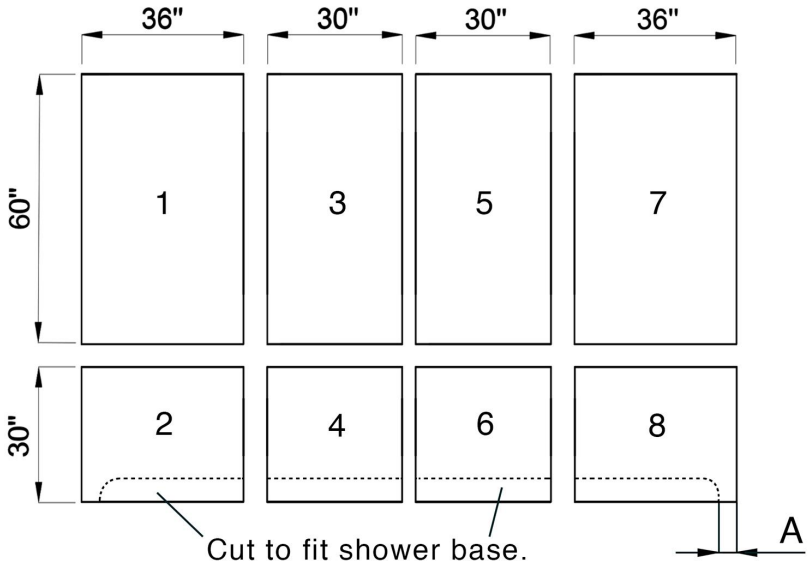

Use caulking and paint to finish if trim is not selected.

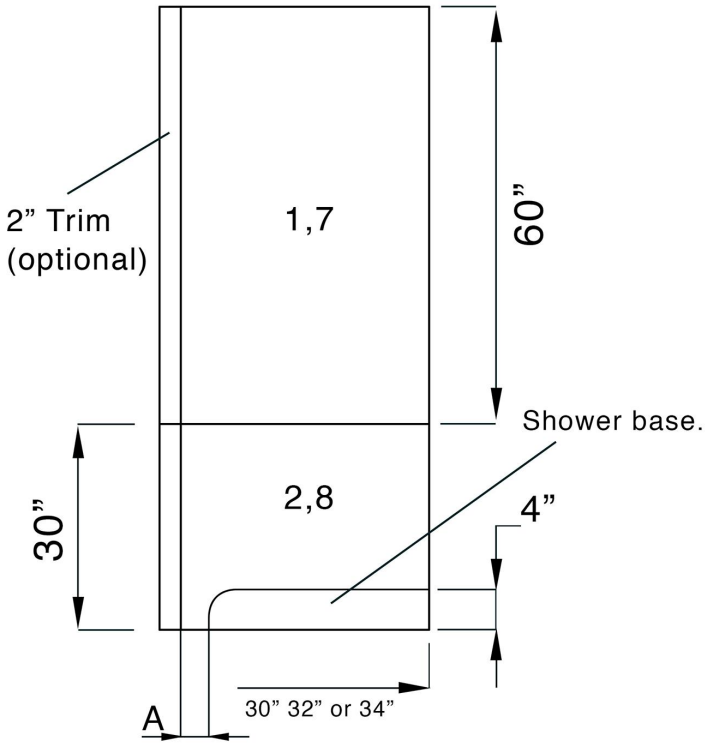

Side view of shower wall and base.

by ella's bubbles

Installation of Shower Panels with a 36" Base

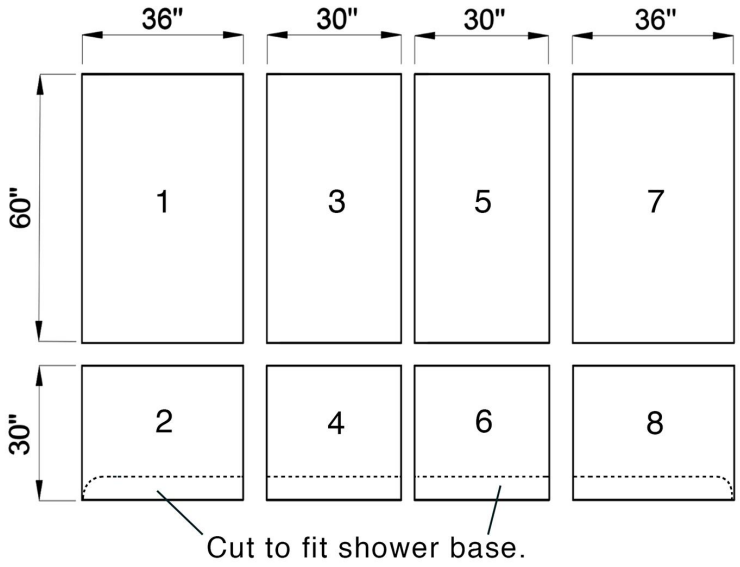

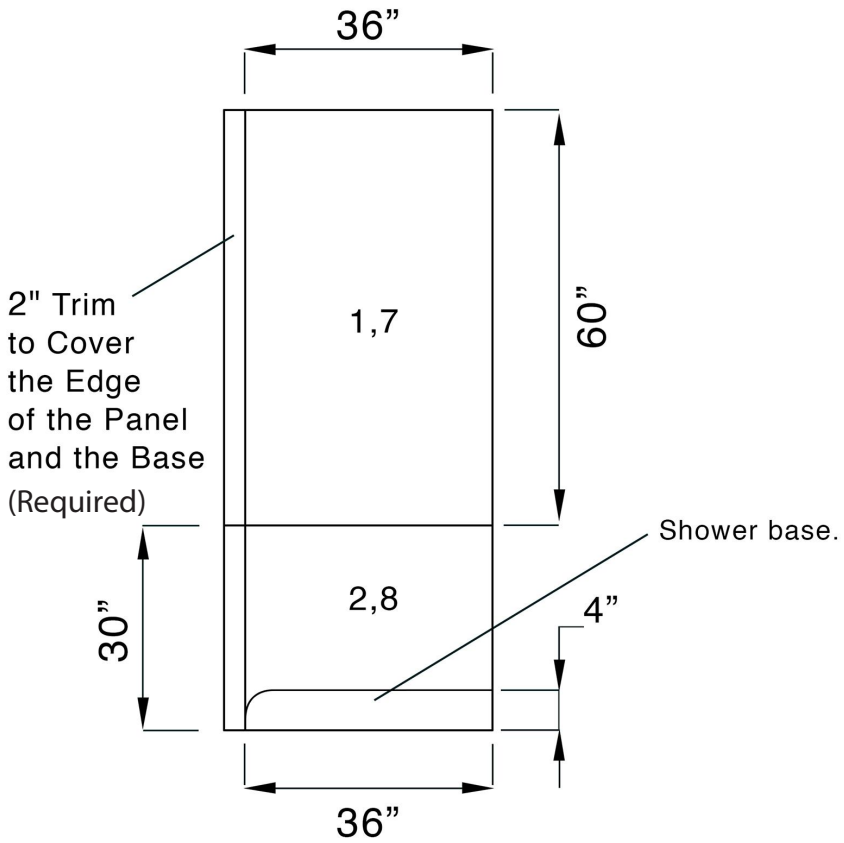

Side view of shower wall and base.

by ella's bubbles

Installation Instructions for Shower Panels

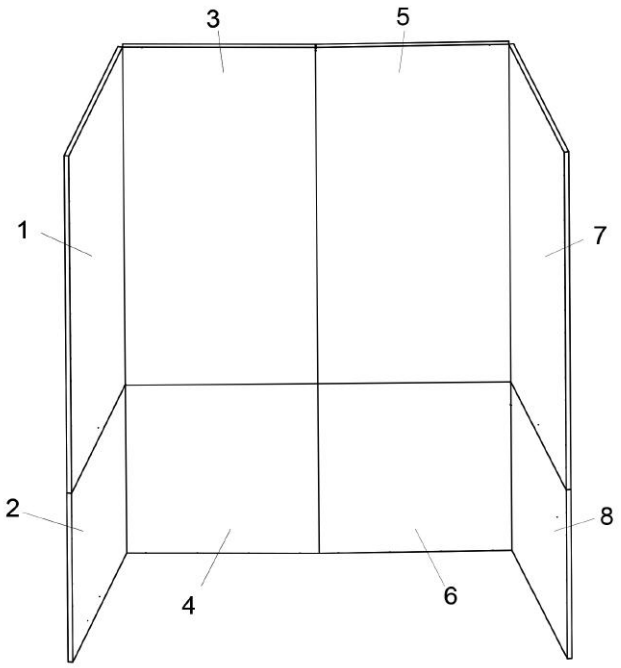

After the shower base is installed please follow the correct sequence of panel installation by referring to its respective drawing.

8 Piece

4 & 6, 3 & 5, 2 & 8, 1 & 7

6 Piece

2 & 6, 3 & 4, 1 & 5

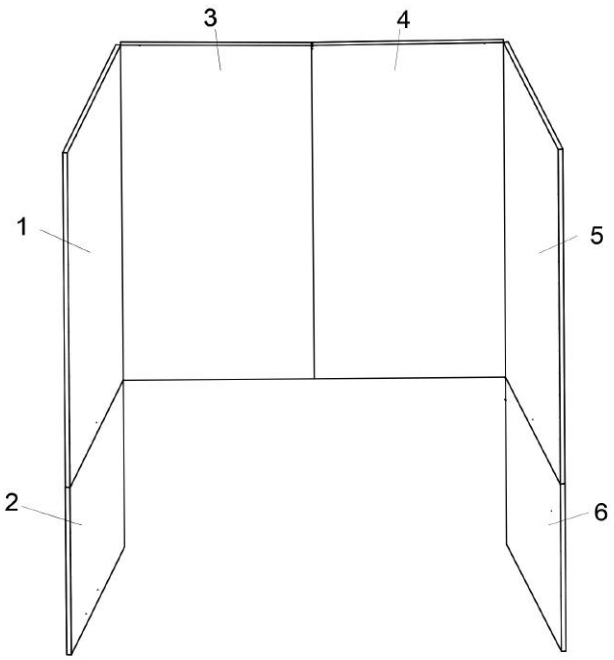

4 Piece

2 & 3, 1 & 4

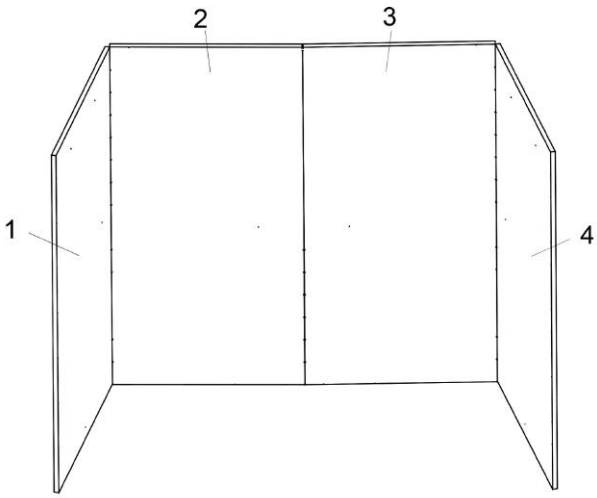

by ella's bubbles

Materials/Tools Required

1. Circular Saw with a masonry/diamond blade
2. Hole saw or jig saw to cut holes for plumbing fixtures with drill
3. Saw horses
4. 2x4s for saw horses and bracing
5. Sandpaper (recommend using 80 grit) for sanding cut edges
6. Tape measure
7. Pencil
8. 24" level
9. Acetone
10. Dry rag
11. Hole saw or jig saw to cut holes for plumbing fixtures
12. 100% Silicone must be used for panel installation
13. Latex caulk for panel to drywall seams

Blade example



Silicone example



Bracing example:

Each panel must be braced for the 100% silicone to entirely cure. Please follow purchased silicone manufacturers directions.

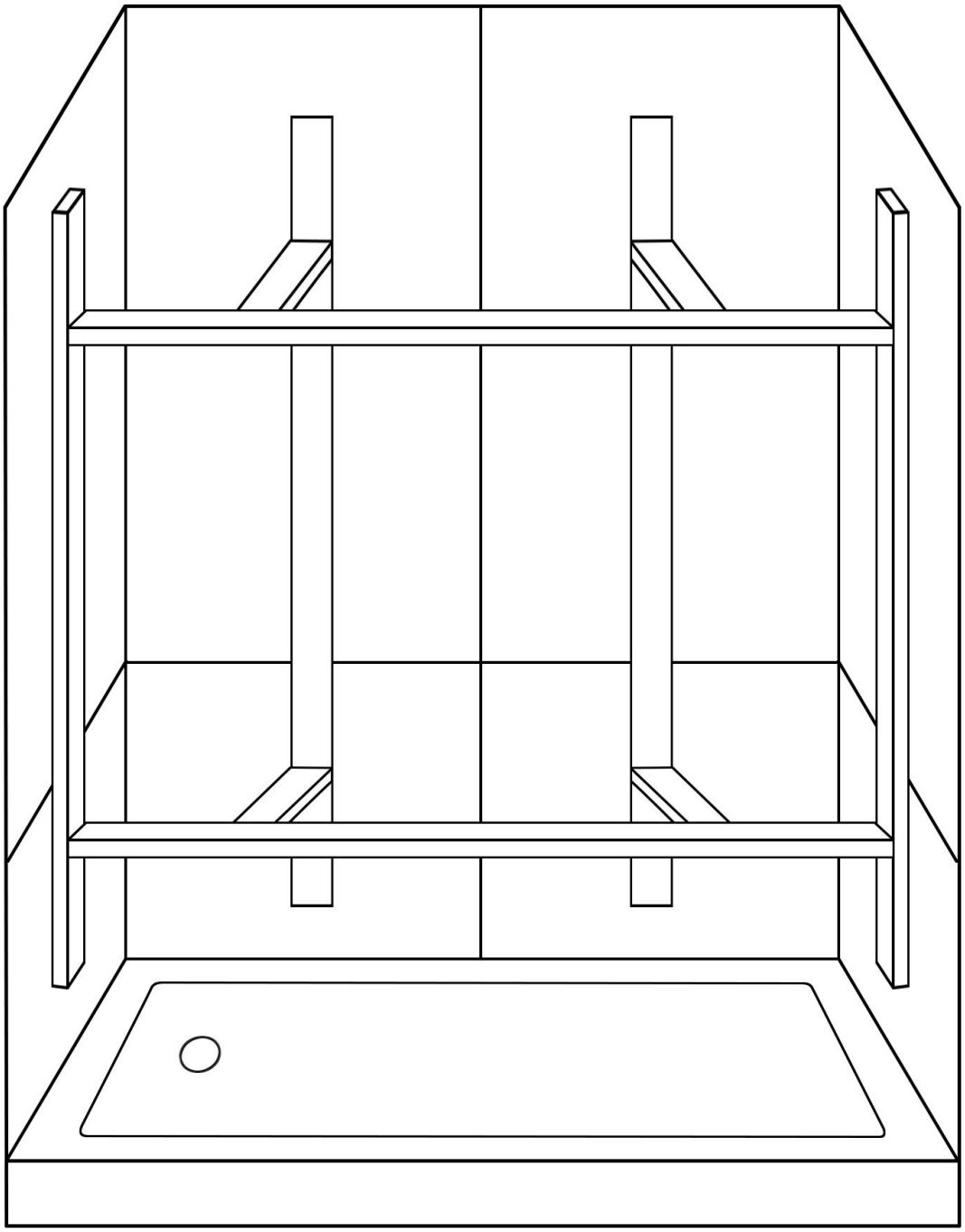

by ella's bubbles

Installation Ideas for Decorative Tile Strips

Please see the below installation ideas for adding decorative or mosaic tile (marked A in drawings). Decorative tiles (not included) can be purchased by the customer and installed in between shower wall panels as a decorative accent strip or if the joint lines of panels do not meet customer's expectations. The wall panels do not have rounded off edges, so it is suggested to add mosaic or decorative tile strip (optional). By adding decorative tile between the panels can also be used to increase the size of the walls. For example, 6" mosaic tiles can be added between the 30" and 60" panels to achieve an 8' high shower wall. The ¾" thick 2" trim also can be used as a separation piece between 2 panels and can be purchased separately if not initially included in your package.

